EDGAR Online

THERAVANCE INC

FORM 8-K
(Current report filing)

Filed 06/19/12 for the Period Ending 06/19/12

Address	901 GATEWAY BLVD SOUTH SAN FRANCISCO, CA 94080
Telephone	6508086000
CIK	0001080014
Symbol	THRX
SIC Code	2834 - Pharmaceutical Preparations
Industry	Biotechnology & Drugs
Sector	Healthcare
Fiscal Year	12/31

Powered By EDGAR Online
http://www.edgar-online.com
© Copyright 2012, EDGAR Online, Inc. All Rights Reserved.
Distribution and use of this document restricted under EDGAR Online, Inc. Terms of Use.

UNITED STATES
SECURITIES AND EXCHANGE COMMISSION

Washington, DC 20549

FORM 8-K

Current Report Pursuant
to Section 13 or 15(d) of the
Securities Exchange Act of 1934

Date of Report (Date of earliest event Reported): **June 19, 2012**

THERAVANCE, INC.

(Exact Name of Registrant as Specified in its Charter)

Delaware	**000-30319**	**94-3265960**
(State or Other Jurisdiction of Incorporation)	(Commission File Number)	(I.R.S. Employer Identification Number)

901 Gateway Boulevard
South San Francisco , California 94080
(650) 808-6000
(Addresses, including zip code, and telephone numbers, including area code, of principal executive offices)

Check the appropriate box below if the Form 8-K filing is intended to simultaneously satisfy the filing obligation of the registrant under any of the following provisions (see General Instruction A.2. below):

☐ Written communications pursuant to Rule 425 under the Securities Act (17 CFR 230.425)

☐ Soliciting material pursuant to Rule 14a-12 under the Exchange Act (17 CFR 240.14a-12)

☐ Pre-commencement communications pursuant to Rule 14d-2(b) under the Exchange Act (17 CFR 240.14d-2(b))

☐ Pre-commencement communications pursuant to Rule 13e-4(c) under the Exchange Act (17 CFR 240.13e-4(c))

Item 8.01 Other Events.

Today at the European Academy of Allergy and Clinical Immunology Congress 2012 in Geneva, Switzerland, GlaxoSmithKline (GSK) presented a poster containing information from a Phase 2a study with RELOVAIR™. RELOVAIR™ is a once-daily inhaled corticosteroid (ICS)/long-acting beta-agonist (LABA) combination treatment, comprising fluticasone furoate and vilanterol (FF/VI), currently in development for the treatment of patients with chronic obstructive pulmonary disease (COPD) and patients with asthma, under the LABA collaboration agreement between GSK and Theravance, Inc. The poster is filed as Exhibit 99.1 to this report and is incorporated herein by reference.

Item 9.01 Financial Statements and Exhibits.

(d) Exhibits

Exhibit	Description
Exhibit 99.1	Fluticasone furoate and vilanterol suppress allergen-induced bronchial hyper-responsiveness to methacholine

SIGNATURE

Pursuant to the requirements of the Securities Exchange Act of 1934, the registrant has duly caused this report to be signed on its behalf by the undersigned hereunto duly authorized.

THERAVANCE, INC.

Date: June 19, 2012

By: /s/ **Michael W. Aguiar**
Michael W. Aguiar
Chief Financial Officer

EXHIBIT INDEX

Exhibit	Description
Exhibit 99.1	Fluticasone furoate and vilanterol suppress allergen-induced bronchial hyper-responsiveness to methacholine

Exhibit 99.1

POSTER NO. 1188

Fluticasone furoate and vilanterol suppress allergen-induced bronchial hyper-responsiveness to methacholine

*Oliver A(1), Quinn D(2), Saggu P(1), Thomas P(3), Lötvall J(4), Bjermer L(5)**

(1)GlaxoSmithKline Respiratory and Immuno-Inflammation Medicines Development Centre, Uxbridge, UK; (2)P3 Research, Wellington, NZ; (3)Faculty of Medicine, The University of New South Wales, Sydney NSW 2052, Australia; (4)Krefting Research Centre, University of Gothenburg, Gothenburg, Sweden; (5)Department of Respiratory Medicine and Allergology, Institute for Clinical Science, Lund, Sweden, *Presenting Author

INTRODUCTION

- A high proportion of people with asthma are affected by airborne allergens.(1)
- Allergen exposure may lead to a biphasic decline in lung function consisting of the early asthmatic response (EAR) and the late asthmatic response (LAR); the latter is associated with the development of airway hyper-responsiveness (AHR).(2)
- Fluticasone furoate (FF)(3) and vilanterol trifenatate (VI)(4) are promising agents for a combined, long-acting, once-daily treatment of asthma.

OBJECTIVES

- Primary: to compare the effect of FF/VI combination on EAR (vs FF or VI monotherapy) and LAR (vs placebo).
- Secondary: to compare the effects of treatments on AHR.

METHODS

- Randomised, double-blind, 4-way crossover study
- 21 days treatment administered in the morning via a novel dry powder inhaler (Figure 1).

Figure 1. Study design

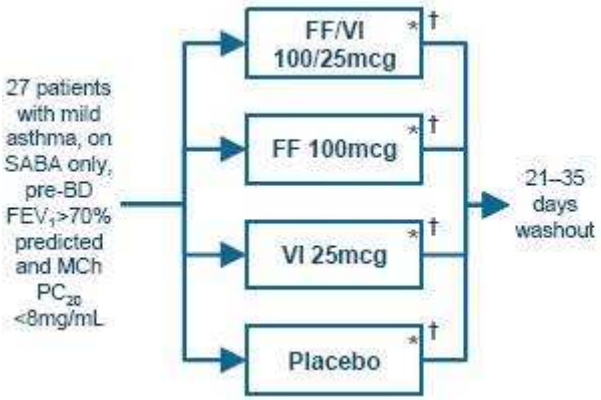

* Allergen challenge on Day 21, 1h post-final dose

† Assessment of AHR on Day 22, 24h post-allergen challenge (25h post-dose) using doubling concentrations of methacholine to induce a 20% fall in forced expiratory volume in 1s (FEV_1) (PC_{20})

RESULTS

Study population and demographics

- Baseline characteristics of study participants are outlined in Table 1.
- Of the 27 patients randomised, one withdrew consent and four protocol deviations during treatment period 1 led to those data being excluded from the analysis for that treatment period.

Pre-challenge lung function

- FEV_1 improved from Day 1 to Day 21 with FF/VI, FF and VI by 230mL (95% CI: 145, 315), 116mL (30, 202) and 183mL (95, 272) respectively. With placebo, FEV_1 declined by 61mL (-147, 24).

Figure 2. Methacholine challenge treatment differences (PC_{20}) performed 25h post-dose and 24h following an inhaled allergen challenge

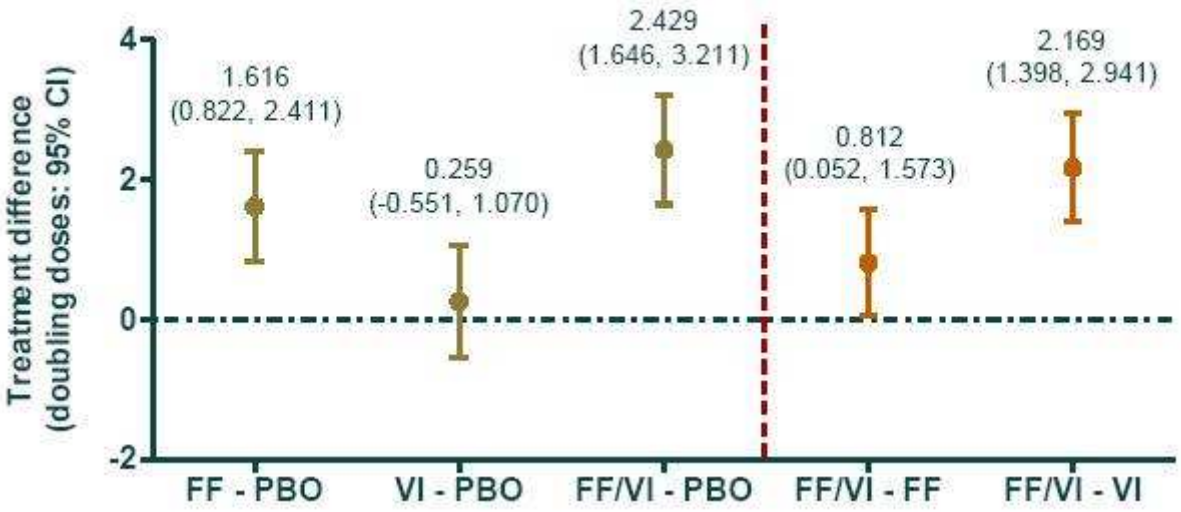

Table 1. Baseline characteristics

Demographics	
Mean age, years (range)	30.8 (18-49)
Female, %	30
Mean BMI, kg/m^2 (range)	25.5 (19.2-35.0)
White race, %	93
Lung function	
Mean pre-bronchodilator FEV_1, L (range)	3.7 (2.7-5.0)
Mean pre-bronchodilator FEV_1 % pred. (range)	92.3 (71.3-119.8)
Methacholine PC_{20}, mg/mL	<8
Allergen, n (%)	
House dust mite	15 (56)
Cat hair/dander	10 (37)
Birch tree	1 (4)
Grass pollen	1 (4)

BMI = body mass index

Allergen challenge (EAR/LAR)

- At all time points assessed, FF/VI exhibited the greatest attenuation of the allergen-induced response; the LAR to allergen challenge was significantly reduced with all active treatments, while the EAR was significantly reduced by FF/VI and FF, relative to placebo.

AHR

- 25h post-dose FF alone and combined with VI significantly reduced AHR vs placebo (Figure 2).
- Combination therapy with FF/VI was superior to monotherapy with FF or VI alone (Figure 2).

Safety

- No serious adverse events or withdrawals were reported.

Safety cont'd .

- On-treatment, treatment-related adverse events occurring in ≥ 2 patients are listed in Table 2.

Table 2. Treatment-related adverse events

n (%)	PBO (n=27)	FF 100 (n=27)	VI 25 (n=27)	FF/VI 100/25 (n=27)
Any AE	7 (26)	5 (19)	4 (15)	6 (22)
Headache	4 (15)	1 (4)	2 (8)	4 (15)
Oral candidiasis	2 (7)	0	0	0
Oropharyngeal pain	1 (4)	1 (4)	0	2 (7)
Throat irritation	0	1 (4)	1 (4)	0

CONCLUSION

- FF/VI provides significant protection from allergen-induced airway hyper-responsiveness shown by an increase in PC_{20} methacholine at 25h post-dose, compared with placebo and FF and VI alone.

REFERENCES

(1) Lötvall J, et al. *J Allergy Clin Immunol* 2011;127:355–360.
(2) O'Byrne PM. *Allergy Asthma Immunol Rev* 2009;1:3–9.
(3) Woodcock A, et al. *Respir Res* 2011;12:160.
(4) Lötvall J, et al. *Eur Respir J* 2012 [Epub ahead of print].

ACKNOWLEDGEMENTS

- The presenting author, Dr L Bjermer, declares the following real or perceived conflicts of interest during the last 3 years in relation to this presentation: received honoraria for speaking and consulting and/or financial support for attending meetings from Almirall, AstraZeneca, Airsonette, Andre Pharma, Boehringer Ingelheim, GlaxoSmithKline, Merck, Mundipharma, Nigaard, Novartis, Nycomed/Takeda and Orion Pharma.

- This study was funded by GlaxoSmithKline; GSK Study Code HZA113126, Clinicaltrials.gov NCT01128595.

- Editorial support was provided by Geoff Weller, PhD, at Gardiner-Caldwell Communications; this support was funded by GlaxoSmithKline.

Presented at the European Academy of Allergy and Clinical Immunology Congress 2012 Geneva, Switzerland, 16 – 20 June, 2012